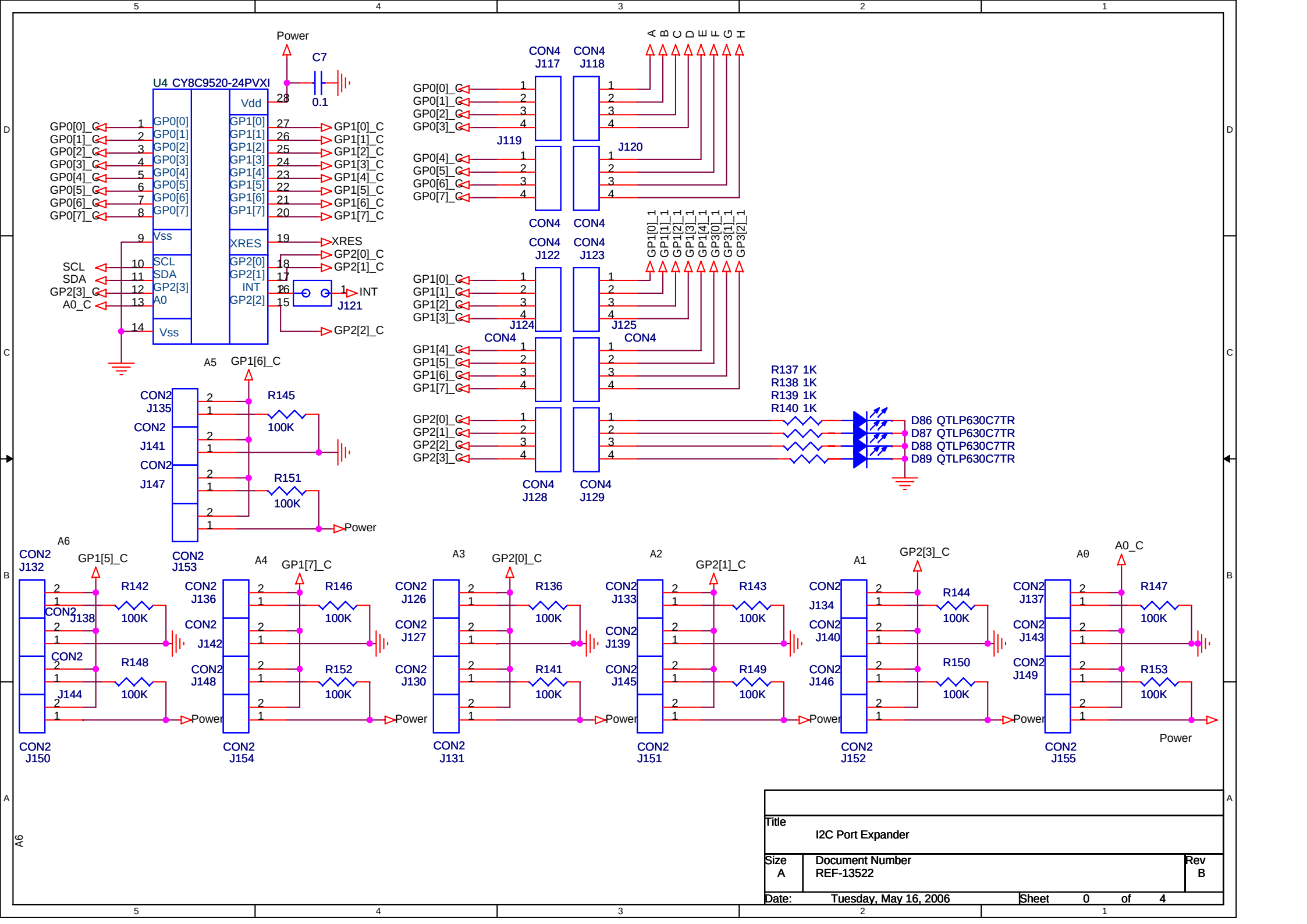
Power
C7
0.1
U4 CY8C9520-24PVXI
Vdd
GP0[0]
GP0[1]
GP0[2]
GP0[3]
GP0[4]
GP0[5]
GP0[6]
GP0[7]
GP1[0]
GP1[1]
GP1[2]
GP1[3]
GP1[4]
GP1[5]
GP1[6]
GP1[7]
Vss
XRES
SCL
SDA
GP2[3]
A0
INT
GP2[2]
GP2[1]
GP2[0]
J121
CON4 J117
CON4 J118
CON4 J119
CON4 J120
CON4 J122
CON4 J123
CON4 J124
CON4 J125
CON4 J128
CON4 J129
R137 1K
R138 1K
R139 1K
R140 1K
D86 QTLP630C7TR
D87 QTLP630C7TR
D88 QTLP630C7TR
D89 QTLP630C7TR
A5
CON2 J135
CON2 J141
CON2 J147
R145
R151
100K
A6
CON2 J132
CON2 J150
R142
R148
CON2 J138
CON2 J144
CON2 J153
CON2 J154
A4
R146
R152
CON2 J136
CON2 J142
CON2 J148
A3
CON2 J126
CON2 J127
CON2 J130
CON2 J131
R136
R141
A2
CON2 J133
CON2 J139
CON2 J145
CON2 J151
R143
R149
A1
CON2 J134
CON2 J140
CON2 J146
CON2 J152
R144
R150
A0
CON2 J137
CON2 J143
CON2 J149
CON2 J155
R147
R153
Title
I2C Port Expander
Size A
Document Number REF-13522
Rev B
Date: Tuesday, May 16, 2006
Sheet 0 of 4